SUPER DUTY® VACUUM PUMPS

Light Excavation Equipment

CALL 1-888-829-2783

WASTECORP Pumps®

THE TVP-90B™

VALVE BOX CLEANING & LIGHT EXCAVATION

The Wastecorp Super Duty TVP-90B is a compact vacuum system designed for operation in confined spaces, congested work zones and high-traffic areas. It enables utility companies, contractors and public works departments to complete small to midsize vacuum projects without the cost and complexity of operating a full-size vacuum truck.Designed to handle both liquid and solid debris, the TVP-90B is well suited for valve box cleaning, utility maintenance, excavation and general site cleanup. It is available as a compact trailer-mounted unit with either a ball coupler or pintle hitch, or as a skid-mounted model for installation on a small flatbed truck. Its lightweight design allows the trailer model to be transported using an appropriately rated light-duty vehicle.

FEATURES:

- 345 CFM Heavy Duty Positive Displacement Blower with Silencer Vacuum Relif Valve
- 90 US gallon steel tank
- 2-1/2in (63.5 mm) x 10ft (3.0 m) flexible wire-reinforced rubber suction base hose
- 2in (50.8 mm) x 6-1/2ft (2.0 m) steel suction wand with handles
- Easy disconnect cam lock hose couplings
- Manway Opening for offloading

THE SUPER DUTY IS MADE FOR:

- Valve Box Cleaning
- Excavation
- Utility Construction
- Slot trenching
- Sewer Cleaning
- Grease Trap Cleaning
- Storm drain, catch basin pumping and cleaning

* Additional Equipment and options required

Vacuum Trailer Project Assistance

When you place an order with Wastecorp for excavation equipment you and your team get dedicated support from start-finish. Wastecorp works with you to get the equipment you need, along with the accessories and tools required. Product support and training are also available.

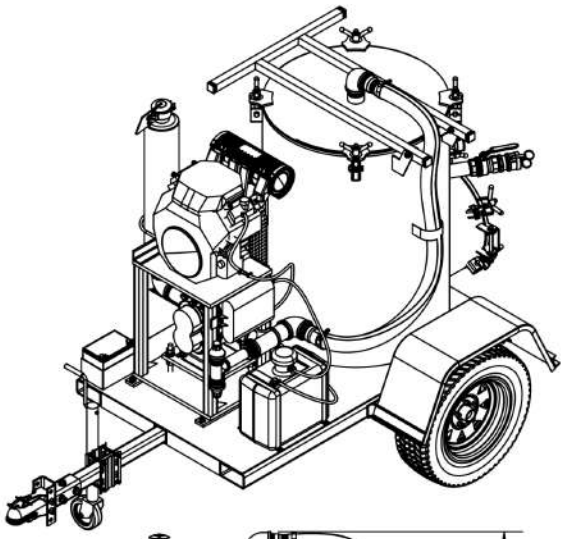

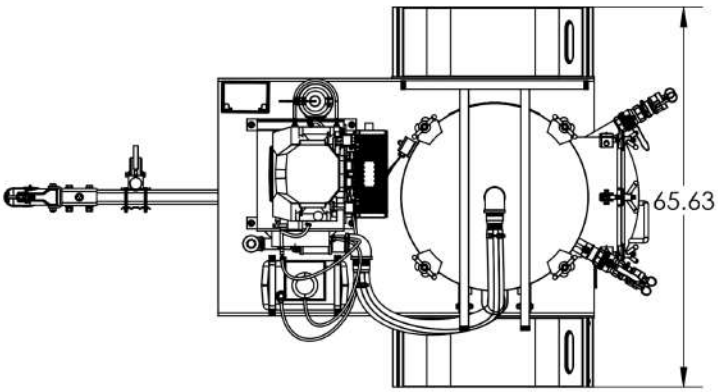

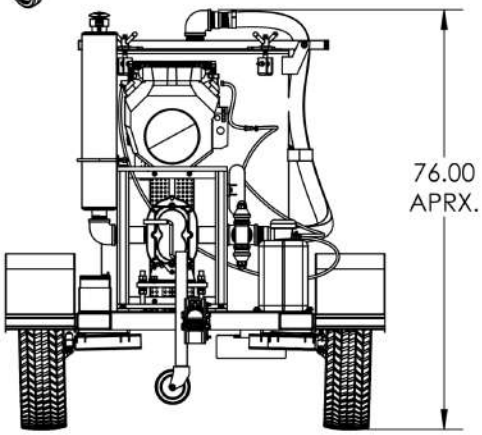

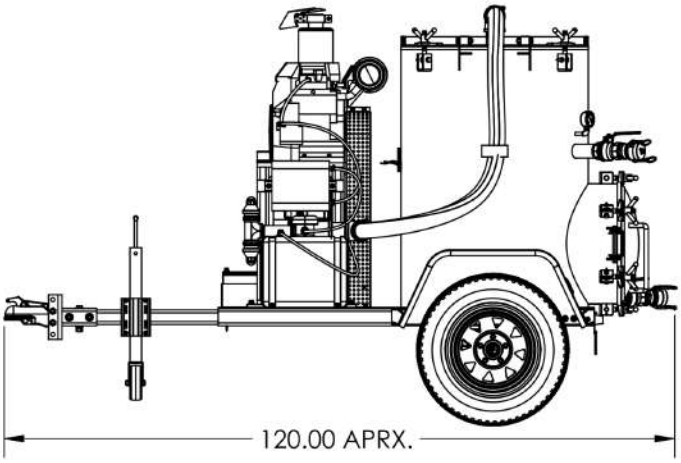

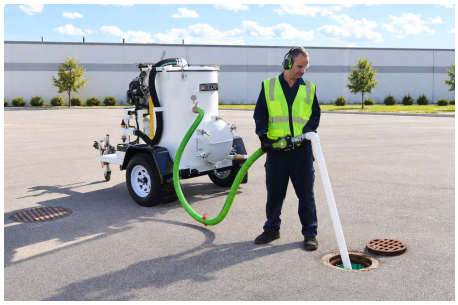

SUPER DUTY® VACUUM TRAILERS
Designed and Manufactured by Wastecorp Pumps in USA and/or Canada.

Toll-Free: 1.888.829.2783 Email: info@wastecorp.com
International: +1-201-445-2882

WASTECORP Pumps®

OEM Manufacturer